3691099b 1 11.02.18

T-Series LED Driver

T-Series LED Drivers provide a high-performance tunable white solution.

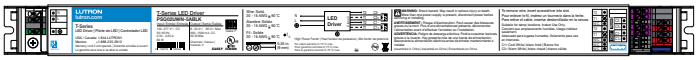

Case type W

1.18 in (30 mm) W x 0.83 in (21.0 mm) H x 16.06 in (408 mm) L

Features

- UL 8750 Listed Class P.
- Each output capable of 100% to 0.1% dimming.*
- For best tunable white performance, operate at 1% or higher. See page 7 for more details.
- Dimming Method:
  - Constant-current reduction (CCR) dimming to 200 mA
  - Pulse-width modulation (PWM) dimming below 200 mA
    - PWM Frequency = 3.6 kHz
    - Outputs of the two channels are synchronized
- Driver consumes two digital addresses: one for intensity and one for color temperature
- Guaranteed performance and compatibility when used with Lutron T-Series controls:
  - T-Series Energi Savr Node unit as part of a Quantum system
- Guaranteed compatibility with T-Series Energi Savr Node as a part of a Quantum system.
- QwikFig Air compatible.
- Protected from miswires of input power to T-Series control inputs up to 277 V∼.
- Rated lifetime of 50,000 hours at 75 °C (167 °F) calibration point (t_c).
- FCC Part 15 Class A.
- 100% performance tested at factory before shipping.
- RoHS compliant.
- For more information please visit: www.lutron.com

T-Series Digital Link Features

- Simpler to wire and more reliable than 0–10 V⎓.
- Guarantees compatibility between Lutron controls and LED drivers.
- Accommodates zone and control changes without rewiring.
- Connect to Quantum Total Light Management Systems to monitor lighting power consumption.
- Polarity-free and topology-free.
- Allows easy code compliance.
- T-Series digital link can be Class 1 or Class 2.
- Non-volatile memory restores all settings after power failure.

* Light output at low-end depends on the efficacy of the LED light engine used with the driver.

Job Name:	Model Numbers:	
Job Number:		

Specifications

Regulatory Approvals and Compliance

- UL Listed Class P
- cULus Listed
- NOM certified
- Lutron Quality Systems registered to ISO 9001.2015.
- Inrush current less than NEMA 410-2011 limit.
- FCC Part 15 Class A
- Meets UL® 8750, "Light Emitting Diode (LED) Equipment For Use in Lighting Products".
- Class 2 outputs
- LED drivers need to meet certain performance criteria in order for the completed luminaires to comply with the ENERGY STAR® Luminaires V2.1 Specification. All models meet these performance criteria throughout their entire load compatibility regions.
- LED drivers need to meet certain performance criteria in order for the completed luminaires to comply with Title 24 requirements as detailed in CEC-400-2015-037-CMF. All models meet commercial performance criteria (at 120 V∼ and 277 V∼) throughout their entire load compatibility regions.
- Compliant with DLC version 4.3 in designated areas (see **Load Compatibility** graph in Output Ranges page 5).

Performance

- Dimming Range: 100% to 0.1%[1]
- Operating Voltage: 120 V∼ / 277 V∼ at 50/60 Hz
- Lifetime: 50,000 hours when calibration point (t_c) at 75 °C (167 °F)[2]
- UL allows operation of t_c up to 90 °C
- For rated warranty, t_c not to exceed 75 °C (167 °F) (maximum rated temperature).[2]
- At turn on, lighting goes to the desired level without decreasing or flashing to full brightness.
- Typical standby power consumption: < 0.5 W at 120 V∼ / 277 V∼
- Open-circuit protected output.
- Short-circuit protected output.
- Over temperature protected.

Environmental

- Sound rated: Class A inaudible in 24 dBA ambient
- Relative Humidity: maximum 90% non-condensing
- Minimum Operating Ambient Temperature: t_a = 0 °C (32 °F)[3]
- Indoor use only.
- Rated for dry and damp locations.

Driver Wiring and Mounting

- Driver is grounded by a mounting screw to the grounded fixture or by a terminal connection.
- It is possible to daisy-chain the T-Series Digital Link using the second set of terminal blocks. See example on page 9.
- Fixture must be grounded in accordance with local and national electrical codes.
- The positive terminals of both output channels are electrically connected inside the driver. This supports the use of common anode loads.
- Terminal blocks on the driver accept one solid wire per terminal from 20 to 16 AWG (0.5 to 1.5 mm²).
- Maximum driver-to-LED light engine wire length for:

Wire Gauge	Maximum Lead Length		
	150 mA to 700 mA	710 mA to 1.50 A	1.51 A to 2.10 A
18 AWG (0.75 mm²)	30 ft (9 m)	15 ft (4.5 m)	10 ft (3 m)
16 AWG (1.5 mm²)	35 ft (10.5 m)	25 ft (7.5 m)	15 ft (4.5 m)
14 AWG (2.5 mm²)[4]	50 ft (15 m)	40 ft (12 m)	25 ft (7.5 m)
12 AWG (4.0 mm²)[4]	100 ft (30 m)	60 ft (18 m)	40 ft (12 m)

[1] For best tunable white performance, operate at 1% or higher. Light output at low-end depends on the efficacy of the LED light engine used with the driver.
[2] To maintain warranty, installer is responsible for ensuring that the driver calibration point does not exceed 75 °C (167 °F).
[3] Where t_a is the temperature of the air directly surrounding the driver.
[4] Terminal blocks on the drivers accept only solid 20 to 16 AWG (0.5 mm² to 1.5 mm²) wire. To use wire gauges larger than the terminal blocks' rated gauge of 16 AWG (1.5 mm²), connect up to 3 ft (1.0 m) of 20 to 16 AWG (0.5 mm² to 1.5 mm²) wire to the LED driver terminal blocks, then connect 12 or 14 AWG (4.0 or 2.5 mm²) up to the length allowed in the above table.

Job Name:	Model Numbers:	
Job Number:		

How to Determine Compatibility Between an LED Driver and LED Load

1. Review the specifications of the LED load.

2. Identify the minimum and maximum operating voltage of the LED load at the desired operating current. This "current" will be the rated output current of the LED driver. Consult the LED load manufacturer for any questions.

   Example: An LED load that is rated at 0.7 A and 30 V nominally, has an input (forward) voltage range of 25–35 V (at 0.7 A) due to unit-to-unit variation, temperature, etc.

3. Examine the LED Driver **Load Compatibility** graphs below for each output range to ensure that the voltage range of the LED load is within the load compatibility range.

   Example: Lines* marked below indicate two load specifications:
   Load A (25 – 35 V) at 0.5 A
   Load B (25 – 35 V) at 0.7 A

Load A (Compatible) ✓

Operating voltage range for load A is 25 – 35 V at 0.5 A. Since the load specifications are within the operating range, the combination of LED Load and LED Driver is compatible.

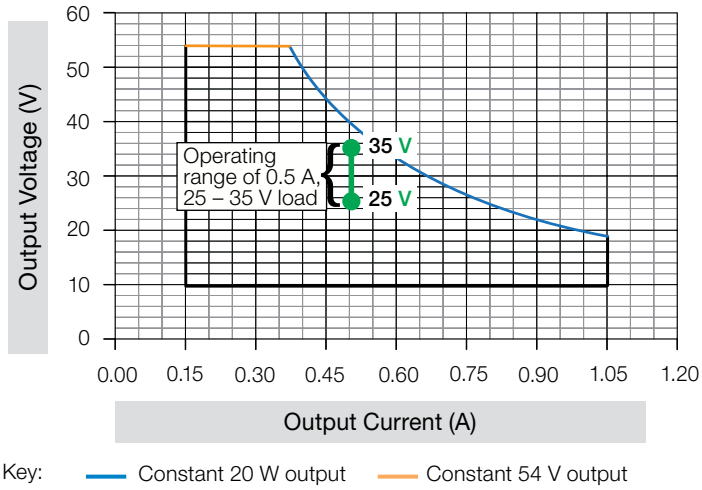

Load B (Not Compatible) ✗

Since the maximum voltage of the load, 35 V, exceeds the 28.5 V allowable at 0.7 A, this combination of LED load and LED driver is not compatible.

Load Compatibility

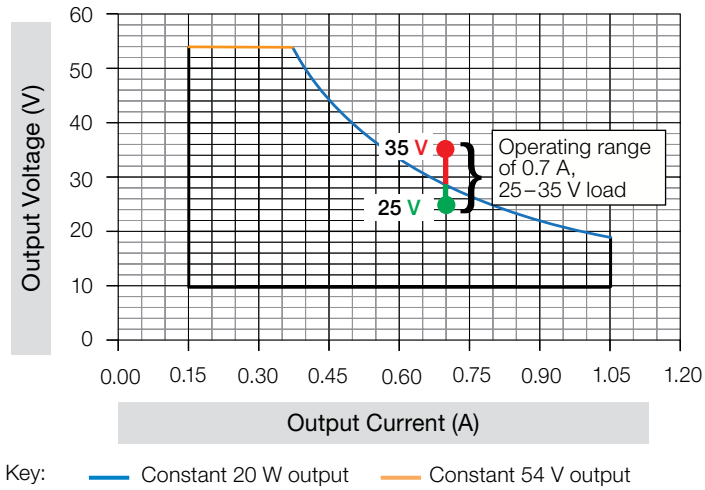

4. The LED Driver Selection Tool is a website compatibility tool that allows for a fast compatibility search of all Lutron LED Drivers that are compatible with an LED Load.

5. See **How to Build A Model Number** to create the appropriate model number for the desired driver. T-Series drivers are only available as "BLK" drivers for use with QwikFig Air.

* Lines are an example and not the range of the T-Series LED driver.

Job Name:	Model Numbers:	
Job Number:		

T-Series Model Number

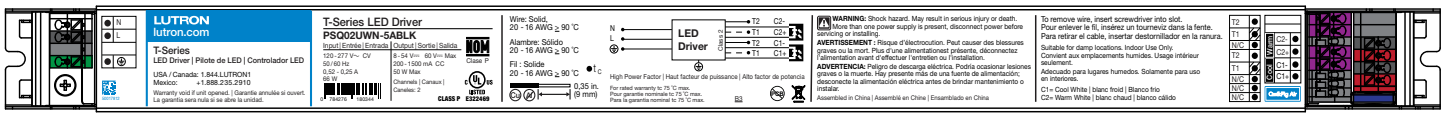

W-case type

P S Q 0 2 U _ N – _ A B L K

Case Type

- **W:** W Case Type

LED Load Output Range: Class 2 Constant Current

(see the following pages for more detail)

- **5:** 50 W Max, 0.20 - 1.50 A, 8 – 54 V⎓*

* Output voltage range changes with output current and according to power limits. Check driver specifications on the following pages carefully to understand output voltage range of a particular SKU. Purchaser is responsible for electrical compatibility between LED driver and LED load.

Job Name:	Model Numbers:	
Job Number:		

“5” Output Range

Driver Type	Output Voltage	Output Current	Output Power	Standards Recognition	Maximum Rated Temp. @ t_c for Warranty
Constant Current Driver (Class 2)	8–54 V⎓	0.20–1.50 A*	50 W**	c UL us LISTED CLASS P E322469	75 °C

* QwikFig compatible model number PSQ02UWN-5ABLK is configurable to any current within this range in 0.005 A increments.
** Each channel is capable of delivering 50 W. The sum of power for both channels must be less than or equal to 50 W.

Typical Performance Specifications:

	277 V∼		120 V∼	
Parameter	**Value**	**Test Conditions**	**Value**	**Test Conditions**
Input Current	0.25 A	V_i = 277 V∼ t_a = 25 °C I_o = 0.90 A V_o = 54 V⎓	0.5 A	V_i = 120 V∼ t_a = 25 °C I_o = 0.90 A V_o = 54 V⎓
Power Factor	0.95		0.99	
THD	7%		6%	
Driver Efficiency	87%		87%	

Load Compatibility

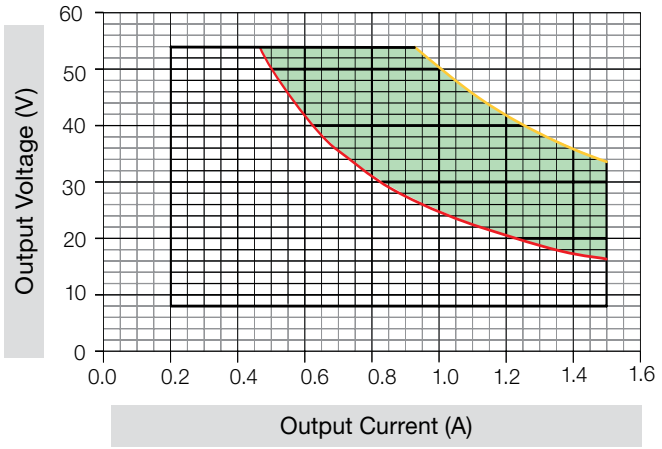

Key: Constant 25 W output — Constant 50 W output

Shaded area meets DLC Version 4.3 (areas outside of shaded areas may not meet THD or PF requirements).

Typical THD vs Total Power Output

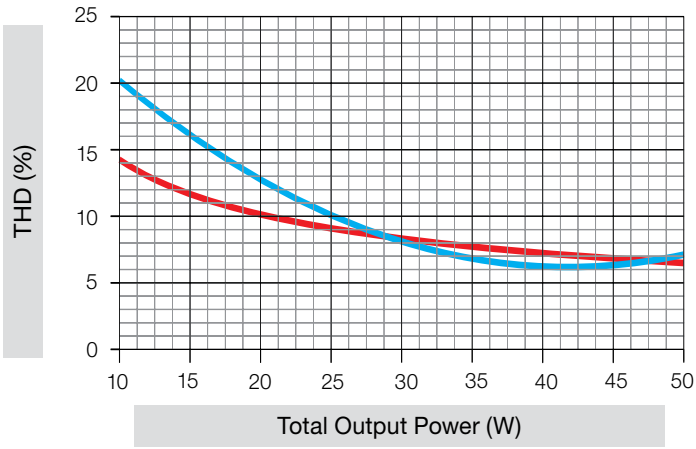

Key: 120 V∼ — 277 V∼

Typical Power Factor vs Total Power Output

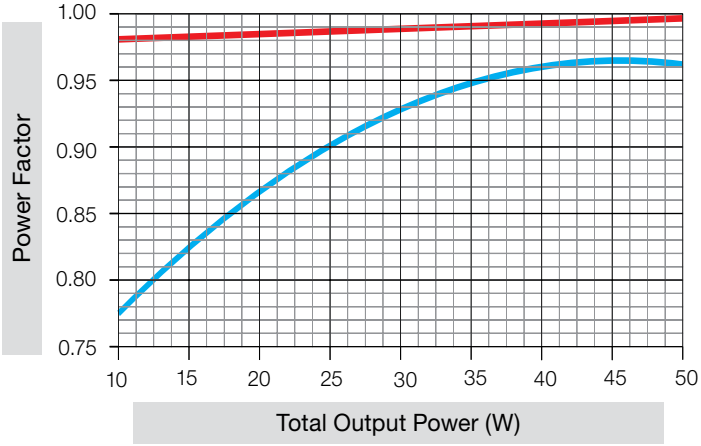

Key: 120 V∼ — 277 V∼

Typical Efficiency vs Output Current

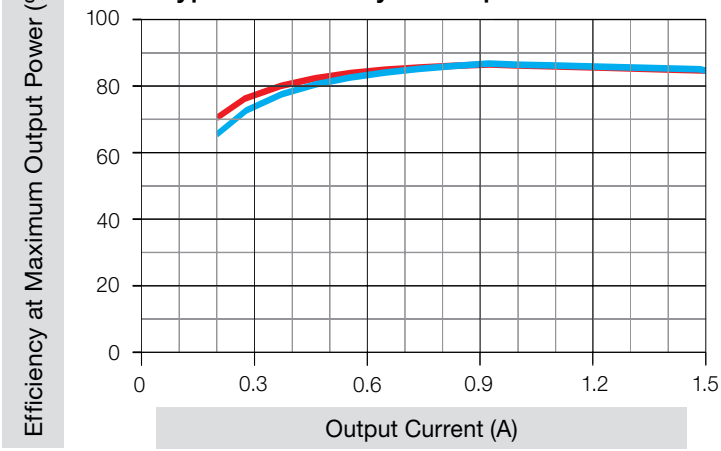

Key: 120 V∼ — 277 V∼

Job Name:	Model Numbers:	
Job Number:		

Dimensions

All measurements shown as: in (mm)

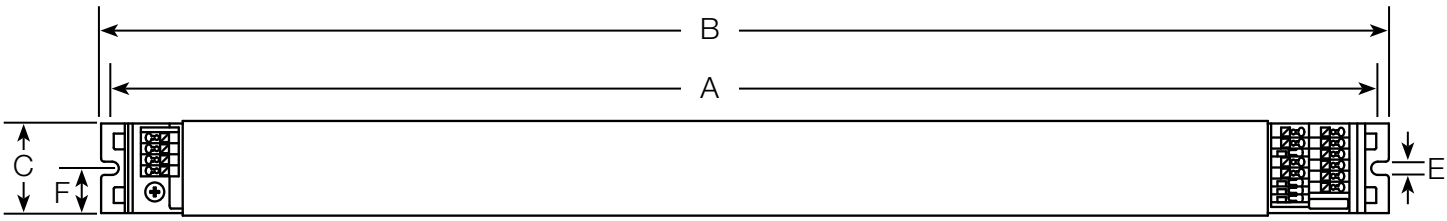

A = 16.06 (408)
B = 15.79 (401)
C = 1.18 (30)
D = 0.827 (21)
E = 0.165 (4)
F = 0.59 (15)

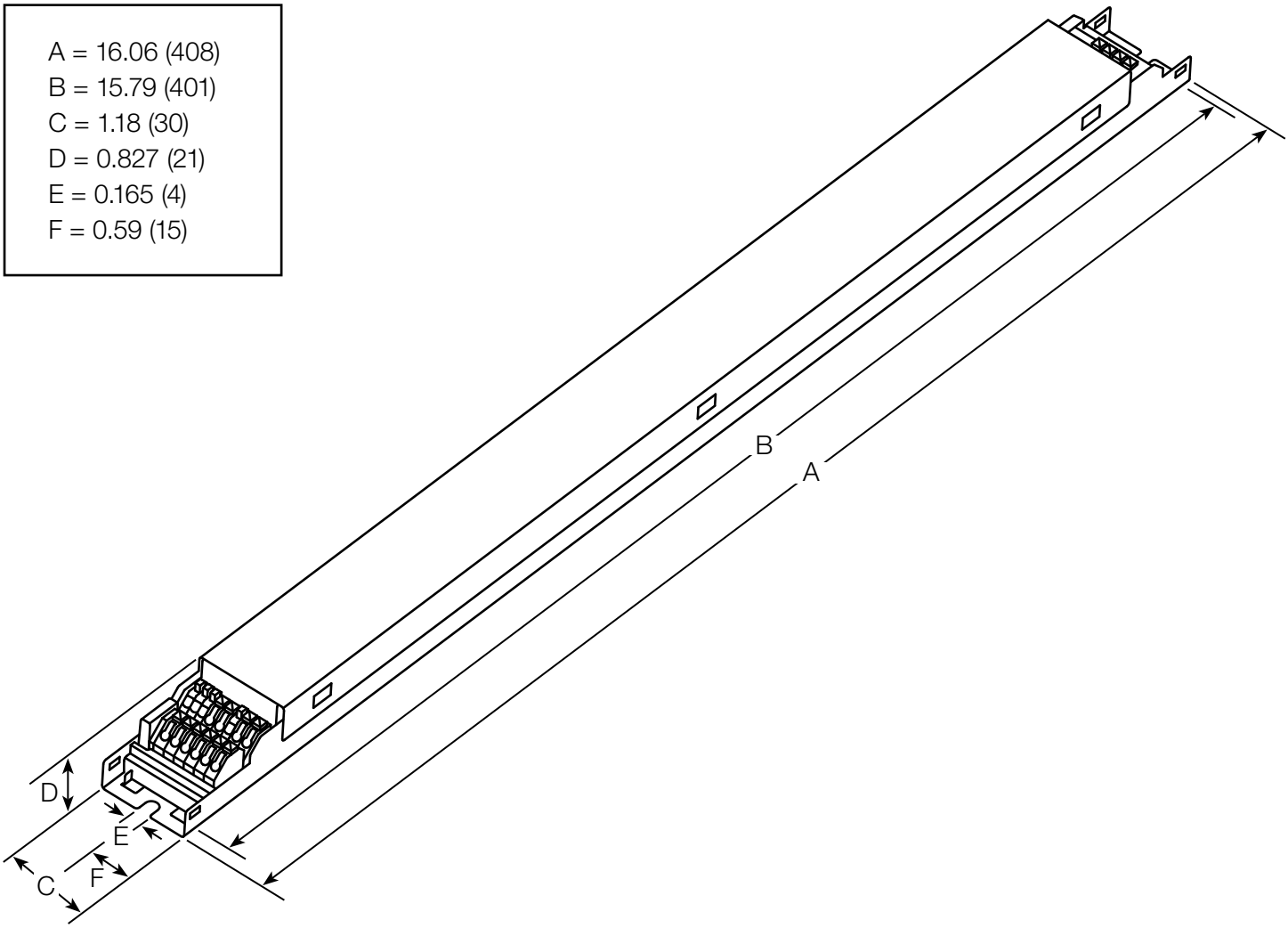

Job Name:	Model Numbers:	
Job Number:		

Wiring Diagram

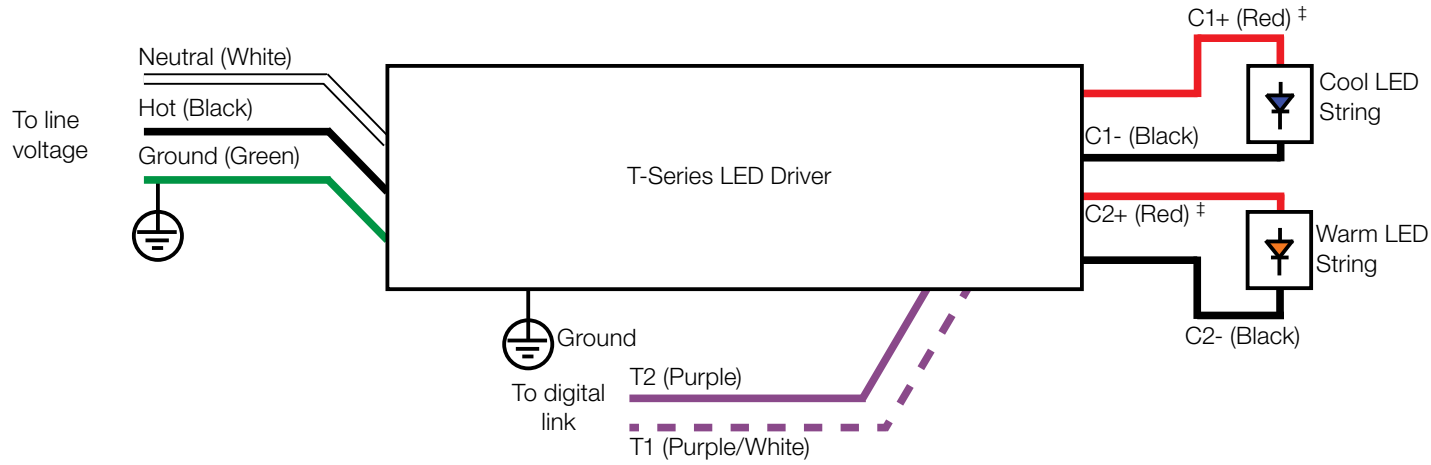

Tunable White Considerations

- The driver will consume two digital addresses:
  - Address N controls intensity*
  - Address N+1 controls color temperature*
- The highest kelvin light source must be connected to channel 1 (cool white).
- The lowest kelvin light source must be connected to channel 2 (warm white).
- The driver can accept LED light sources with a physical CCT value between 1500 K and 6500 K.
- The driver default minimum intensity level is set to 1%. See **Tunable White Capability** figure below for more information.
- Operation below 1% may be acceptable in some applications. The minimum level can be adjusted below 1% through the Quantum software. See the chart below for understanding the general trade off of dimming range versus color temperature range.

Tunable White Capability

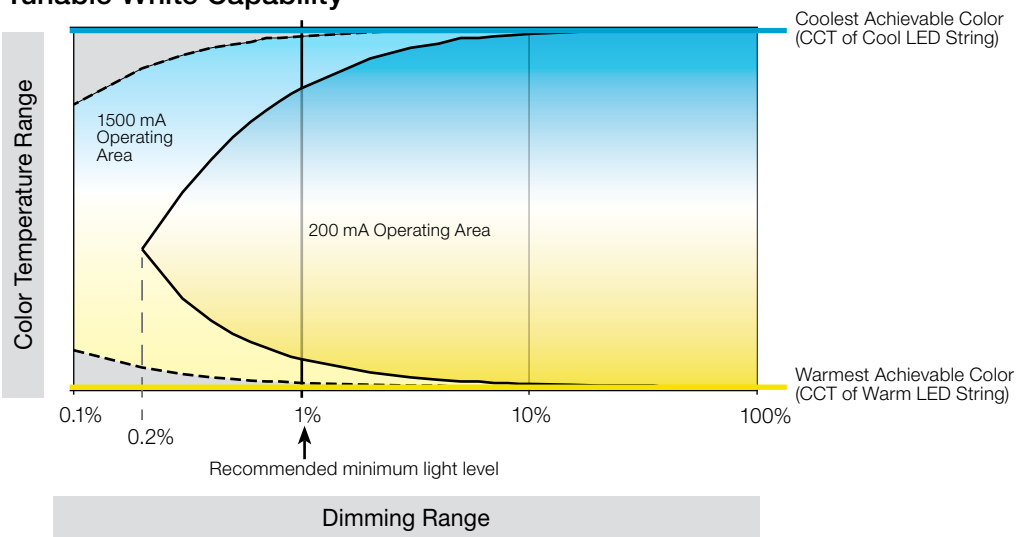

‡ C1+ and C2+ are electrically connected inside the driver. This supports the use of common anode loads.
* This is the default behavior. During commissioning, the system may change the addresses to be non-consecutive.

Job Name:	Model Numbers:	
Job Number:		

Compatible Controls: Lutron T-Series Digital Controls

Guaranteed performance specifications with the controls listed in the chart below.

For assistance selecting controls, contact our LED Center of Excellence at **1.877.346.5338** or **LEDs@lutron.com**

Lutron T-Series Compatible Controls	Part Number				
	120 V~	277 V~	T-Series Loops per Control	T-Series Drivers per Loop	Total T-Series Drivers per Control
T-Series Energi Savr Node*	QSN-TW		2	32**	64

* Must be used as part of a Quantum system version 3.4 or higher.

** Each T-Series loop is capable of having 64 addresses. Each driver consumes two addresses.

Job Name:	Model Numbers:	
Job Number:		

T-Series Wiring

T-Series Digital Link Overview

- The T-Series Digital Link wiring (T1 and T2) connects the digital ballasts and drivers together to form a lighting control system.
- T1 and T2 (T-Series digital link wires) are polarity-insensitive and can be wired in any topology (e.g., T-tap and daisy-chain).
- Power is supplied to the T-Series Digital Link from the control system.

T-Series Digital Link Wiring

- Make sure that the supply breaker to the drivers and T-Series Digital Link Supply is OFF when wiring.
- Connect the two conductors to the two driver terminals T1 and T2 as shown.
- Using two different colors for T1 and T2 will reduce confusion when wiring several drivers together.
- There are two sets of T-Series Digital Link terminal blocks to support daisy chaining the link.
- The T-Series Digital Link may be wired Class 1 or Class 2. Consult applicable electrical codes for proper wiring practices. Please refer to Lutron Application Notes #106 and #142 at www.lutron.com for more information.
- For emergency wiring, please refer to Lutron Application Note #106 at www.lutron.com

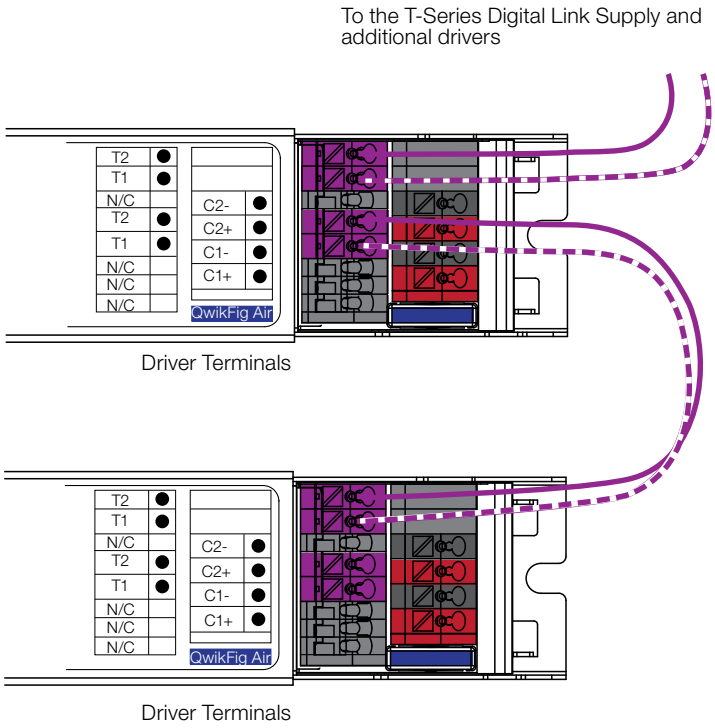

Notes

- The T-Series Digital Link Supply does not have to be located at the end of the Digital Link.
- Both wires of the T-Series digital link are included in **Maximum Wire Length** below.
- The T-Series Digital Link length is limited by the wire gauge used for T1 and T2 as follows:

Wire Gauge	Maximum Wire Length
12 AWG	1000 ft *
14 AWG	1000 ft *
16 AWG	900 ft
18 AWG	550 ft

Wire Size	Maximum Wire Length
4.0 mm^2	300 m *
2.5 mm^2	300 m *
1.5 mm^2	300 m *
1.0 mm^2	207 m
0.75 mm^2	155 m

* Cable lengths of more than 1000 ft (300 m) are not recommended

Job Name:	Model Numbers:	
Job Number:		

Service

Warranty

For warranty information, please visit www.lutron.com/driverwarranty

Replacement Parts

When ordering Lutron replacement parts, please provide the full model number. Consult Lutron if you have any questions.

Further Information

For further information, please visit us at www.lutron.com or contact our LED Control Center of Excellence at 1.877.346.5338 or LEDs@lutron.com

Job Name:	Model Numbers:	
Job Number:		